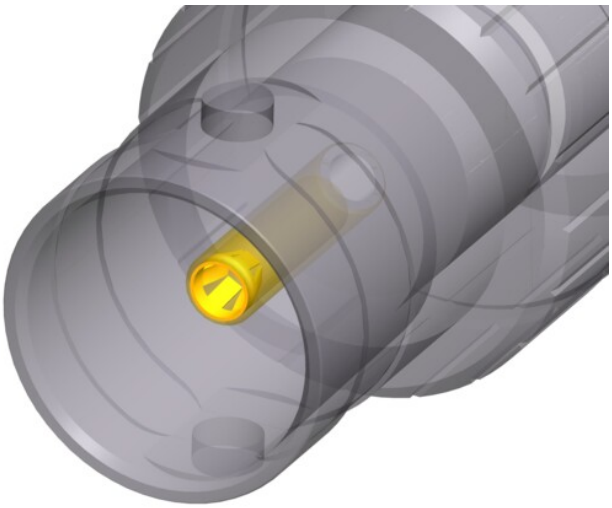

# NBB75DFGX

Grounded UHD BNC chassis connector, feedthrough in antraloy plated D-shape housing

Neutrik's UHD BNC chassis connectors offer low return loss values at high frequencies specific for high resolution video signal transmission. The machined brass connector body provides an extremely rugged and non-abrasive connection over long term use and is in addition recessed and therefore well protected in a D-shape housing

## Features & Benefits

- Optimized gold plated cage type center contact for UHD signals as 4K or 8K
- Swiss antraloy plating
- Grounded panel mount
- Standard D-shape housing provides flush mounting and protection from damage
- Color coding possible
- Fully compatible with conventional BNC cable connectors


All rights reserved / 25.04.2024

## Optimized Return Loss

Due to optimized insulator design the Neutrik rearTWIST UHD BNC chassis connector achieves increased headroom compared to conventional BNC connectors and offers additional return loss reserve for potential impedance deviations resulting from cable bending, incorrect connector assembly or faulty connection interfaces without signal interruption. For more details see Neutrik UHD BNC White Paper.

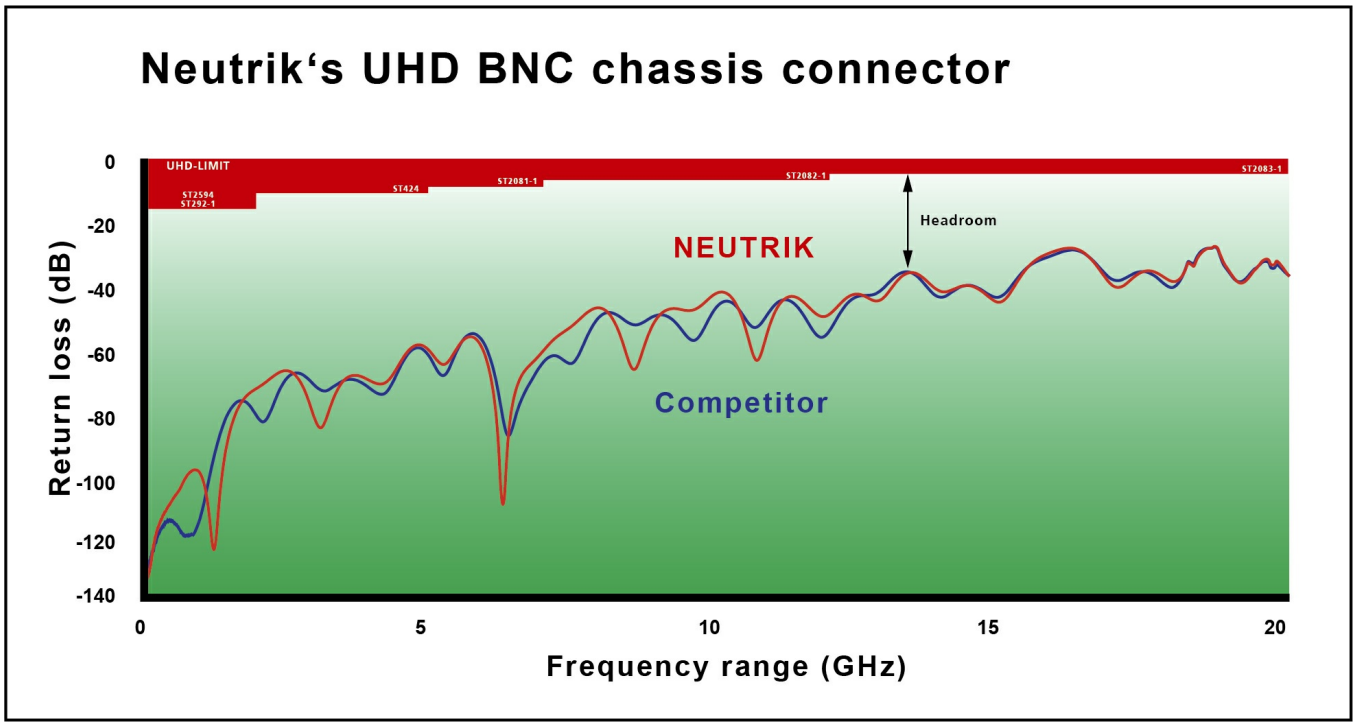


## New cage type contact

- Closed contact design - extremely robust
- Gold plated cage type clip - best possible shielding and lowest contact resistance


All rights reserved / 25.04.2024

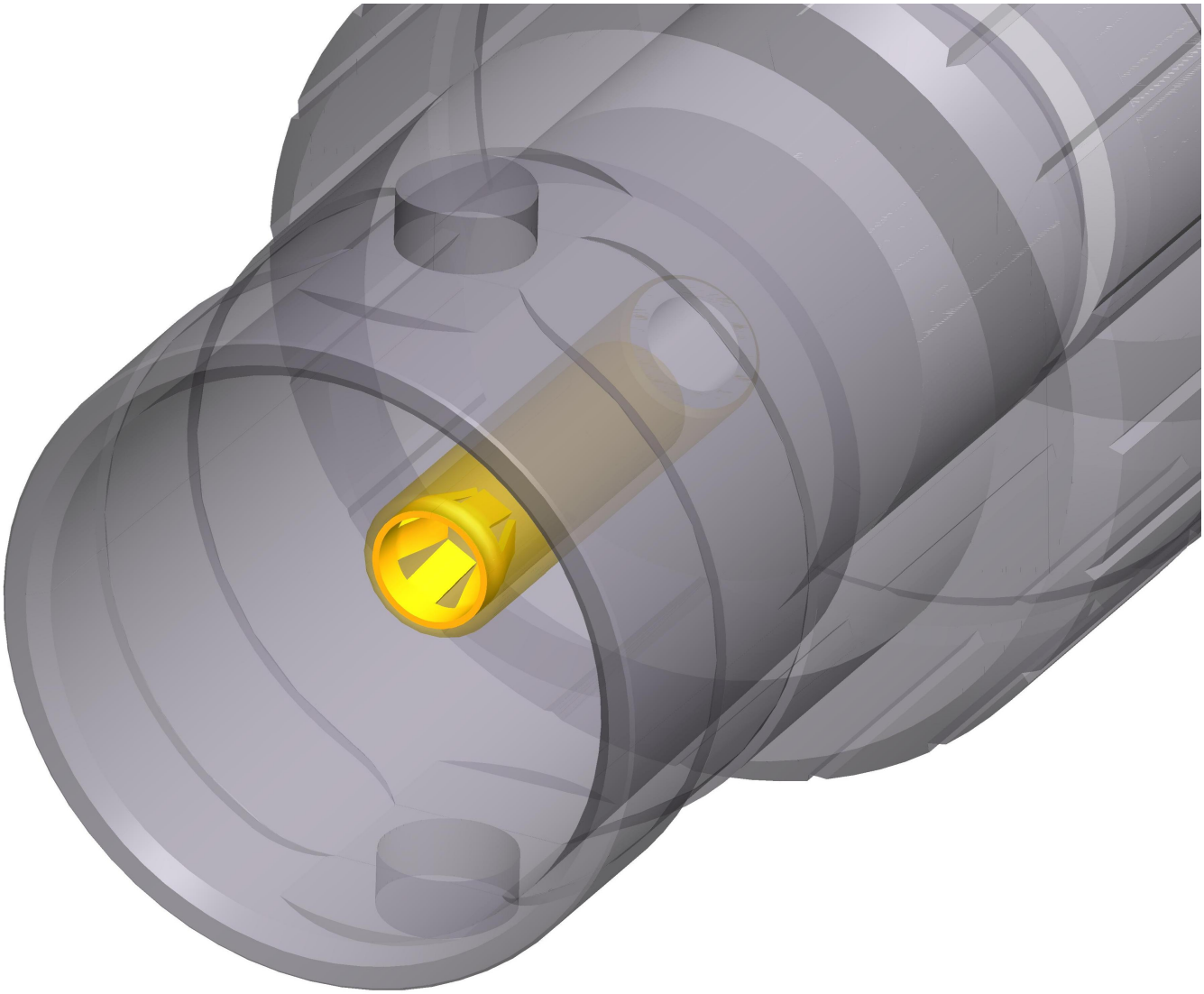


All rights reserved / 25.04.2024

NEUTRIK

# Technical Information

| Product | |
|---|---|
| **Title** | NBB75DFGX |
| **Connection Type** | BNC 75 Ω |
| **Gender** | female |

| Electrical | |
|---|---|
| **Contact resistance** | ≤ 3 mΩ (inner) |
| **Contact resistance** | ≤ 2 mΩ (outer) |
| **Dielectric strength** | 1.5 kVdc |
| **Impedance** | 75 Ω |
| **Insulation resistance** | > 5 GΩ |
| **Rated voltage** | < 50 V |
| **VSWR** | ≤1.06 / >30 dB up to 6 GHz<br>≤1.13 / >24 dB up to 12 GHz<br>≤1.22 / >20 dB up to 18 Ghz |
| **Signal type** | UHD, SDI, Video, AES/EBU, Composit, YUV, RGB, RGBH, RGBHV |

| Mechanical | |
|---|---|
| **Insertion force** | < 25 N |
| **Lifetime** | > 1000 mating cycles |
| **Wiresize** | |
| **Locking device** | Bayonett |
| **Mounting direction** | Front mounting |
| **Chassis shape** | D |


All rights reserved / 25.04.2024

## Material

| | |
|---|---|
| **Contacts** | Brass (CuZn39Pb3), 0.2 µm AuCo (center contact) |
| **Insert** | PTFE |
| **Shell** | Polyacetal (POM) (insulation shell) |
| **Shell plating** | Antraloy |
| **D-shape housing** | Zinc diecast (ZnAl4Cu1) |

## Environmental

| | |
|---|---|
| **Temperature range** | -30 °C to +85 °C |


All rights reserved / 25.04.2024