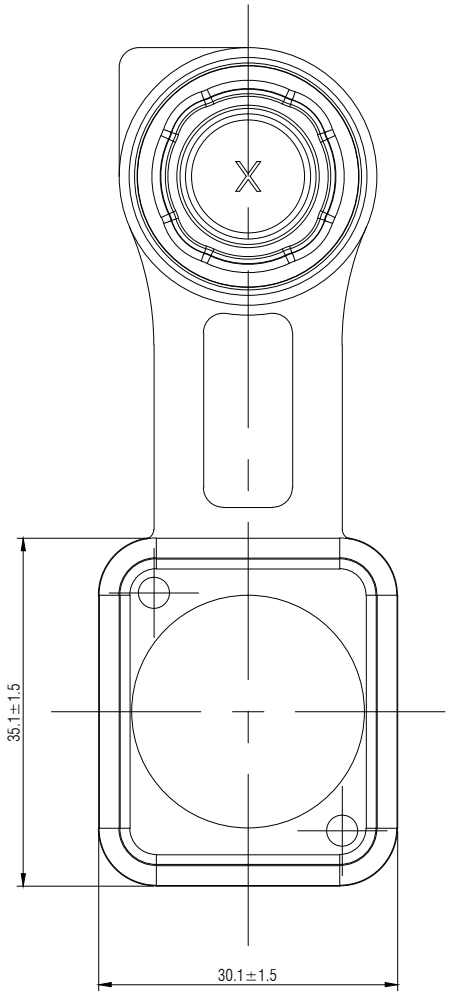

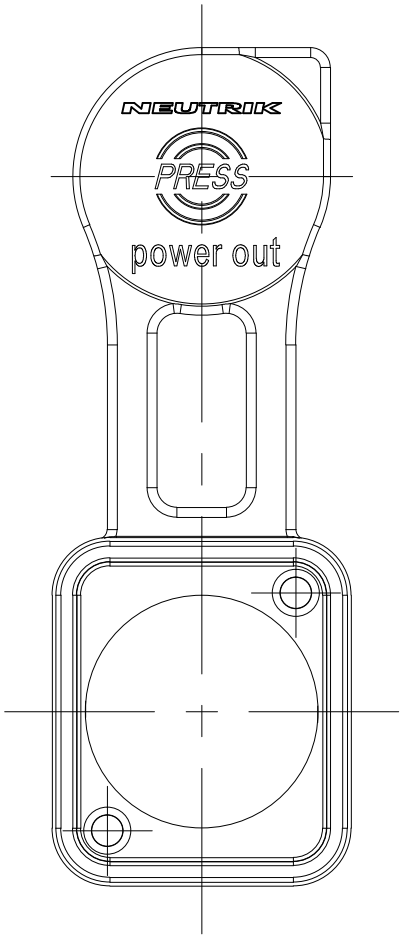

Note:

1. All dimensions in mm.
2. Tolerances not specified is ±0.50mm.

Rev.	Revision Details	Date	Name
A	Add the "NEUTRIK" Brand	2023.04.27	Jie.Yu

THIS DOCUMENT IS THE PROPERTY OF NEUTRIK. NO PART THEREOF MAY BE REPRODUCED AND USED WITHOUT THE PRIOR WRITTEN CONSENT OF THE OWNER

		Date:	Name:
Designer:	2022.1.18	Robin	
Checked:	2022.1.18	Rex	
Approved:			

Material:

Scale: 2 : 1 (A3)

Title: SCNAC-02

Replaced By: 1

Replaces: 1

NEUTRIK

Drawing No.: 3.663.034